MODEL PD2266
4-STATION PUMP DRIVE

Product Description

Model PD2266 is a heavy duty 4-station pump drive offered in either direct engine mount via SAE flange, or independent mount. This unit has four output stations for fitment with SAE pump pads sizes “B” to “F” and various ISO and custom pads. Pad size and location are customer specified.

MAX POWER:	Input: 2300 HP Output: Up to 1800 HP at any output
MAX INPUT SPEED:	2000 RPM
MAX TORQUE:	Input: 8600 lb-ft. Output: Up to 5300 lb-ft at any output
ROTATION:	Output pads rotate opposite input
RATIO:	1:1 1.17:1, 1.29:1 reduction
OUTPUT OPTIONS:	SAE, ISO, and custom pump pads. Custom shafts, disconnects and clutches.
MOUNTING OPTIONS:	SAE flange size #00 or #00. Remote mount, shaft coupling connected.
FLYWHEEL COUPLING OPTIONS W/SAE FLANGE:	Overcenter clutches, torsional couplings, drive plates, custom.
LUBRICATION:	Internal reservoir. Lube pump included. Heat exchanger required.
APPROXIMATE WEIGHT:	3000 lbs.

<Prev TOC Next >

This drawing shows general arrangement and approximate space claim. Do not scale, design, or lay out using this drawing. Use only certified installation drawings provided by Cotta Engineering.

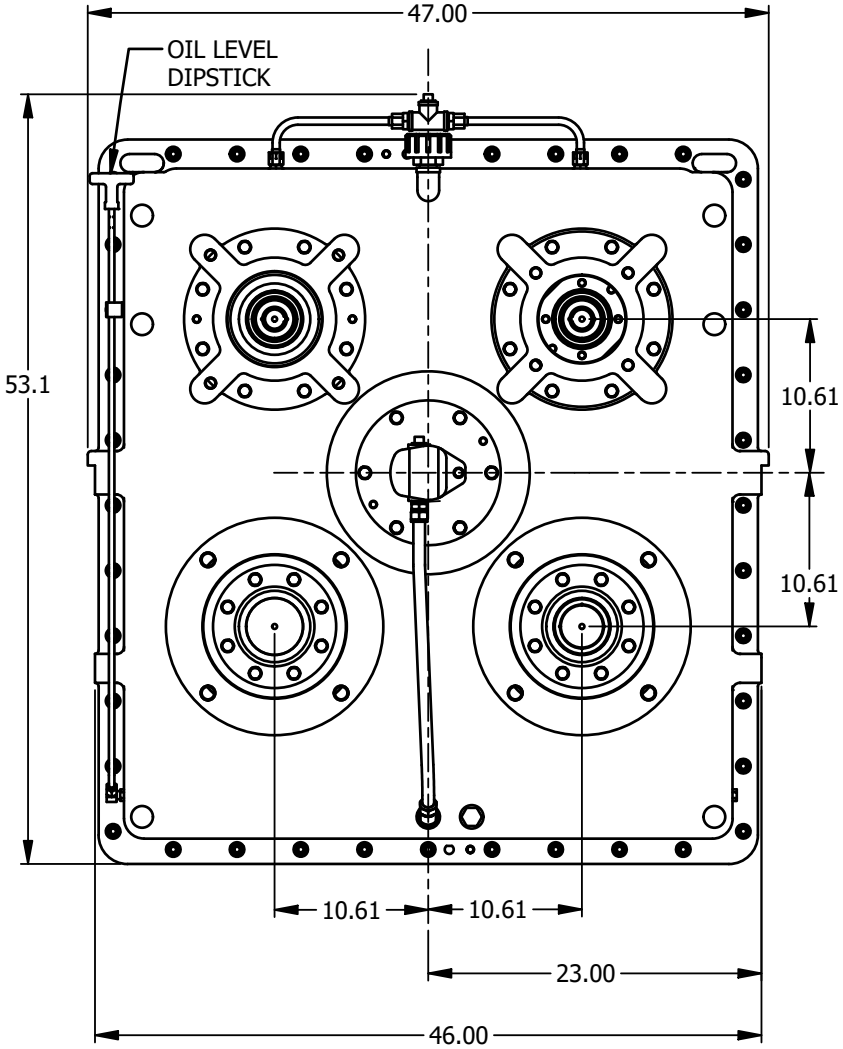

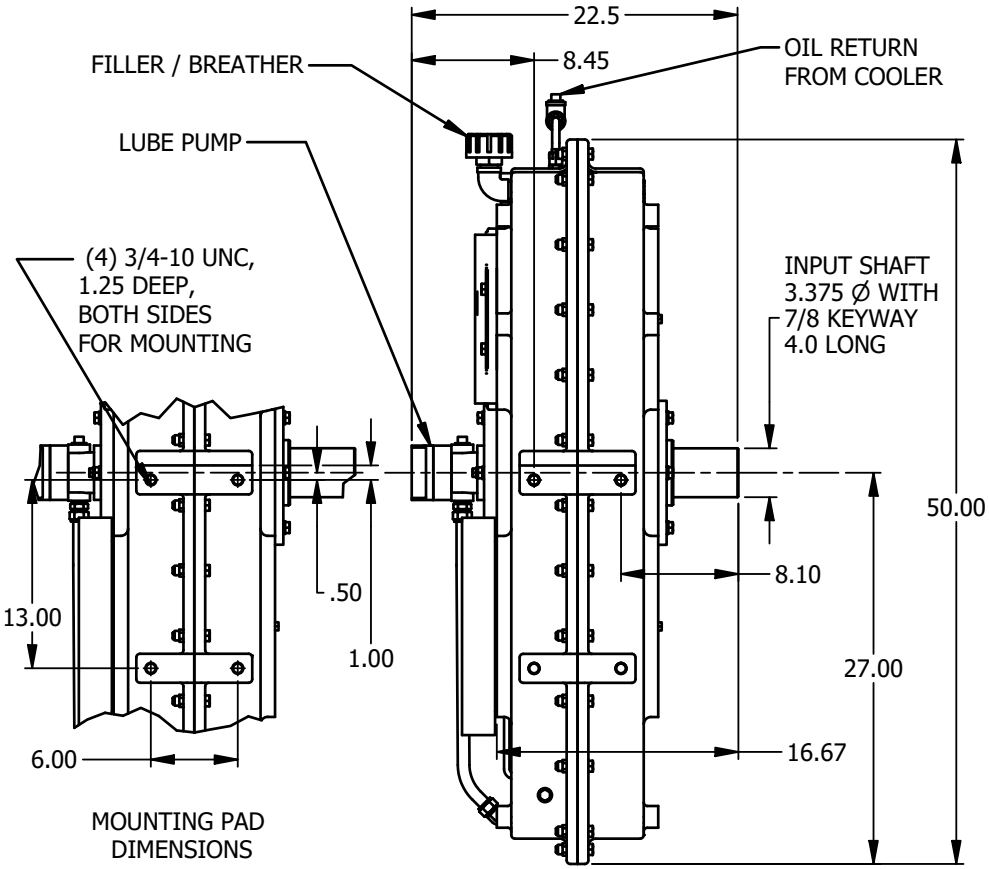

COTTA PAD KIT OPTIONS
SAE "B", 2 AND 4 BOLT
SAE "C", 2 AND 4 BOLT
SAE "D", 4 BOLT
SAE "E", 4 BOLT
SAE "F", 4 BOLT
250 mm DIN
315 mm DIN

COTTA SPLINE KIT OPTIONS
SAE "B-B", 15 TOOTH SPLINE
SAE "C", 14 TOOTH SPLINE
SAE "D", "E", 13 TOOTH SPLINE
SAE "F", 15 TOOTH SPLINE
17 TOOTH, 8/16 PITCH SPLINE
DIN 5480, N80 X 3 X 25

<Prev TOC Next>

PD2266 DWG.